STILE PREPARATION

ADAMS RITE SUPPLY VERSIONS FOR EITHER A 45, 52 OR 55mm THICK DOORS

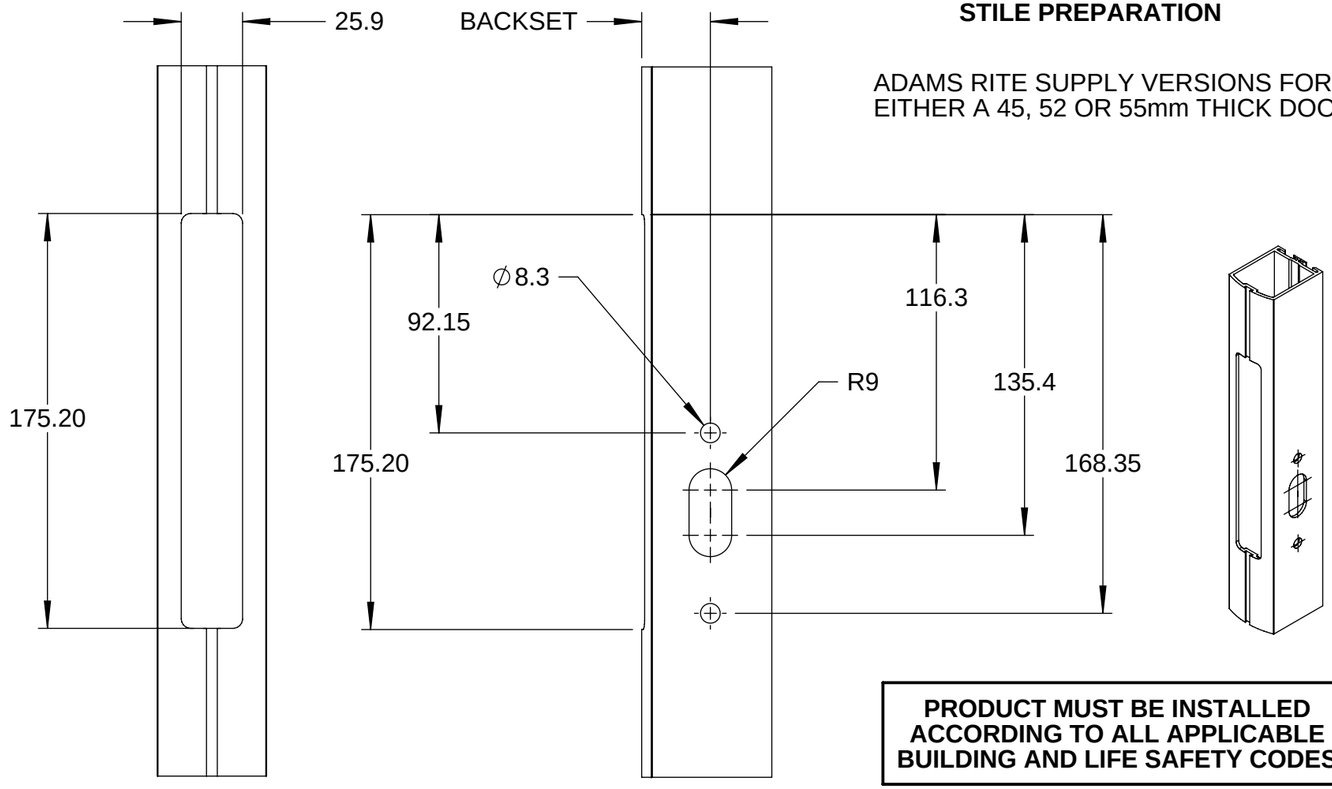

PRODUCT MUST BE INSTALLED ACCORDING TO ALL APPLICABLE BUILDING AND LIFE SAFETY CODES

PADDLE ASSEMBLY CONFIGURATIONS

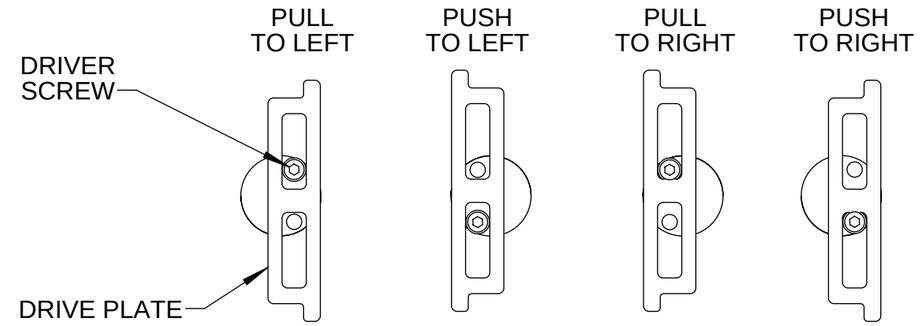

FITTING CAM COMPONENTS

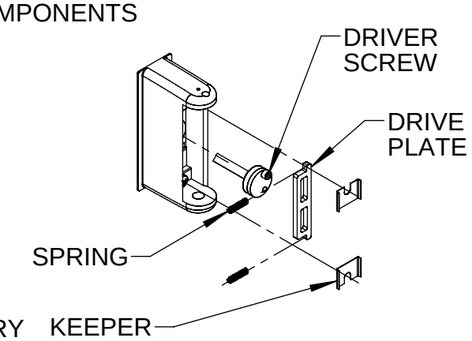

1. FIND DESIRED CONFIGURATION.
2. REMOVE KEEPERS TO SEE LOCATION OF SPRINGS & DRIVER PLATE.
3. REVERSE SPRINGS & DRIVER PLATE IF NECESSARY.
4. REMOVE DRIVER SCREW IF NECESSARY AND PLACE IN DESIRED LOCATION.
5. REPLACE KEEPERS.

-NOTE REAPPLY THREADLOCK LOCTITE 222 OR SIMILAR TO DRIVER SCREW AND CSK SCREWS.

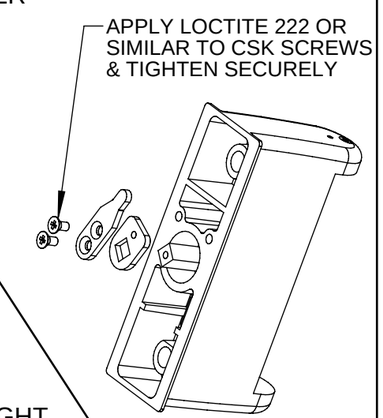

INSTALLING BINDER POSTS AND NUTS

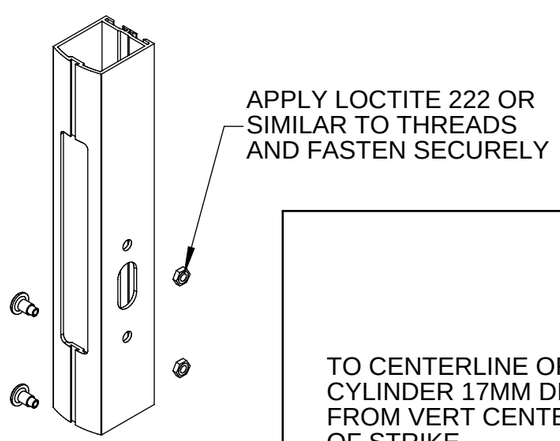

STRIKE PREPARATION

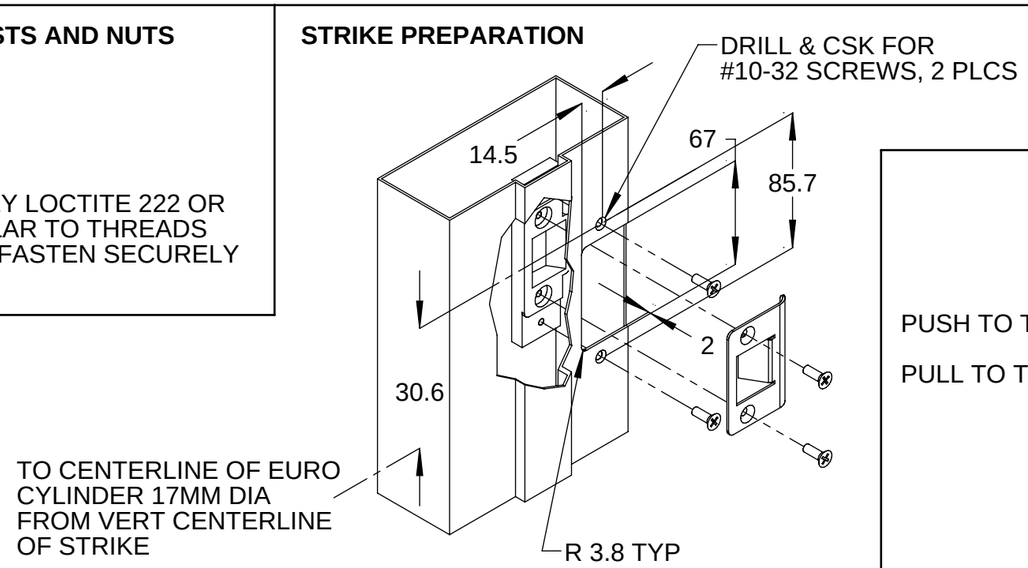

CAM CONFIGURATIONS

PUSH TO THE LEFT

PULL TO THE LEFT

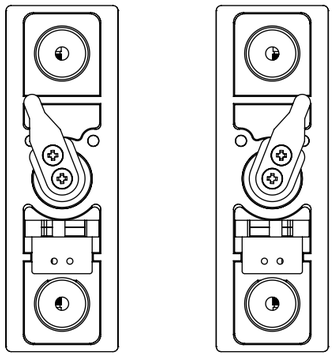

PUSH TO THE RIGHT

PULL TO THE RIGHT

Adams Rite
ASSA ABLOY
Adams Rite Europe LTD.
The Meadows, Cannock Road,
Wolverhamton
WV10 0RR
+44 (0) 854 873 4338

4596 PADDLE OPERATOR

CE CERTIFICATE OF CONFORMITY No. 1211-CPD-ABB013

INSTALLATION INSTRUCTIONS

80-0180-101 Rev. A.2 ECN: 11417 Date: 07-03-07 Page 1 of 2 Appvd: Date:

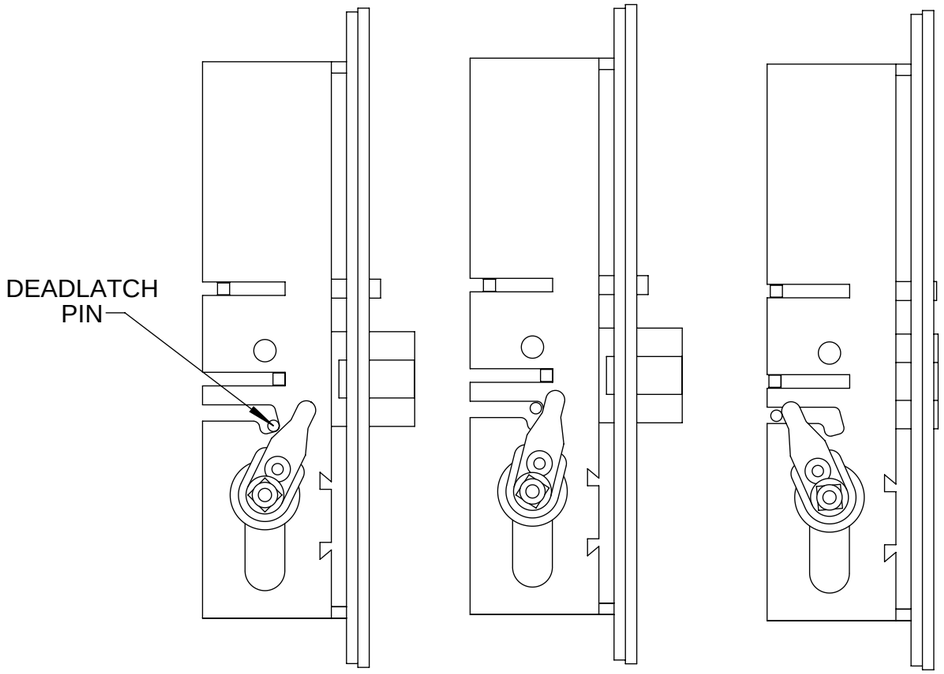

PUSH DEADLATCH PIN SO THAT IT PROTUDES ON THE SIDE THE PADDLE HANDLE IS TO BE FITTED AND IS FLUSH WITH CASE ON THE OTHER SIDE

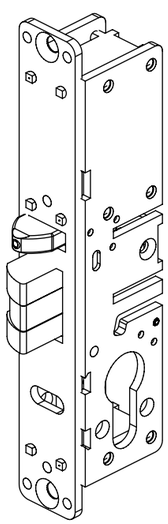

CAM AND PIN CONFIGURATION
(ESCUTCHEON AND PAD REMOVED FOR CLARITY)

IN ORDER TO INSTALL THE DEALATCH INTO THE DOOR DEPRESS THE LATCHBOLT AND TILT THE CASE AT AN ANGLE TO GIVE CLEARANCE TO THE PIN THROUGH THE FACEPLATE CUTOUT

PRODUCT MUST BE INSTALLED ACCORDING TO ALL APPLICABLE BUILDING AND LIFE SAFETY CODES

FITTING THE ESCUTCHEON

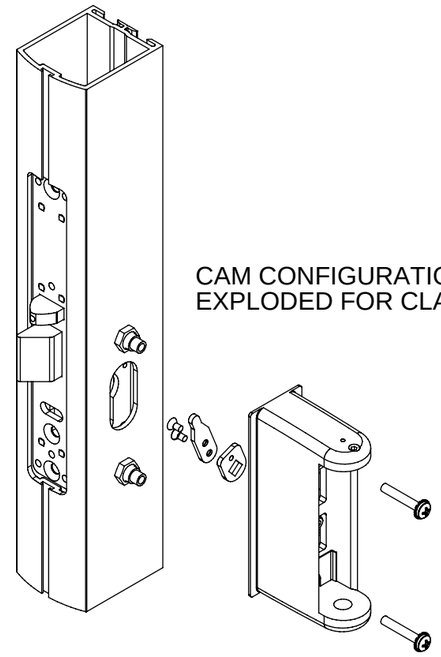

CAM CONFIGURATION SHOWN EXPLODED FOR CLARITY

FIT THE STAR WASHERS TO THE MACHINE SCREWS AND APPLY LOCTITE 222 OR SIMILAR TO THE THREADS & FASTEN THE ESCUTCHEON SECURELY TO THE DOOR

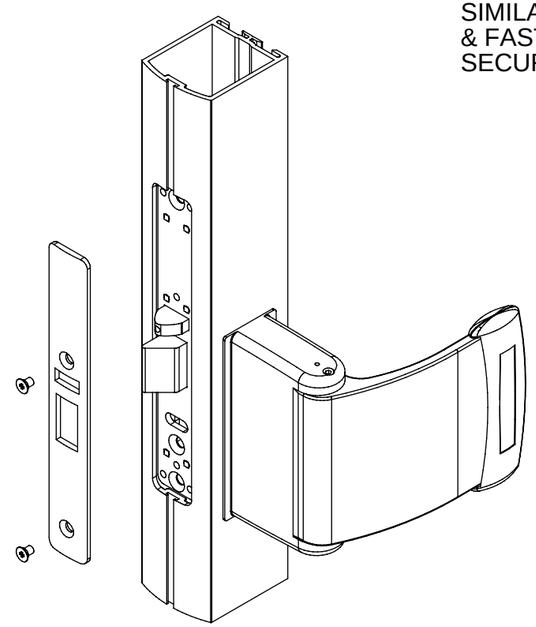

INSTALLING THE PAD & PIVOT PIN

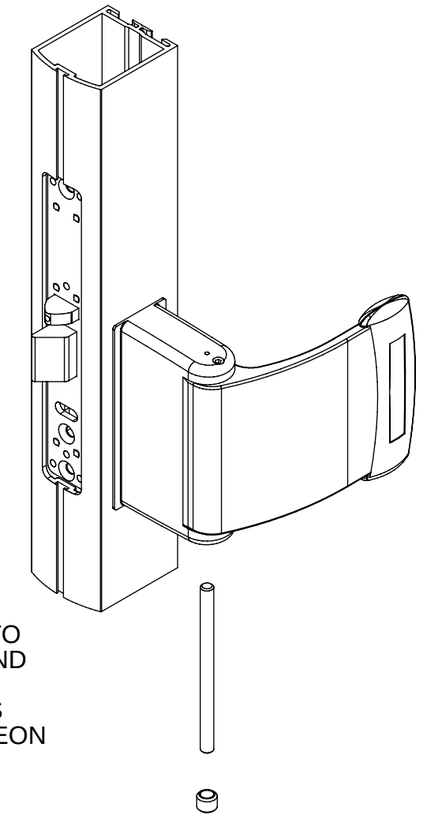

BRASS RETAINING SCREW SHOULD FINISH FLUSH WITH UNDERSIDE OF ESCTCHEON. DO NOT TIGHTEN.

Adams Rite
ASSA ABLOY
Adams Rite Europe LTD.
The Meadows, Cannock Road,
Wolverhamton
WV10 0RR
+44 (0) 854 873 4338

4596 PADDLE OPERATOR

CE CERTIFICATE OF CONFORMITY
No. 1211-CPD-ABB013

INSTALLATION INSTRUCTIONS

80-0180-101 Rev. A.2 ECN: 11417 Date: 07-03-07 Page 2 of 2 Appvd: Date: